PIDFLIGHT

PIDflight Lap Timing System: Revision 01 PCB Assembly Guide

Table of Contents

PIDflight Lap Timing System: Revision 01 PCB Assembly Guide.....1
Introduction.....3
Parts.....4
PCB Assembly.....5
Flashing firmware.....6

Introduction

The purpose of this document is to describe the steps to assemble the PIDflight Lap revision 01 PCB and special instructions for flashing the firmware to the Arduino Nano.

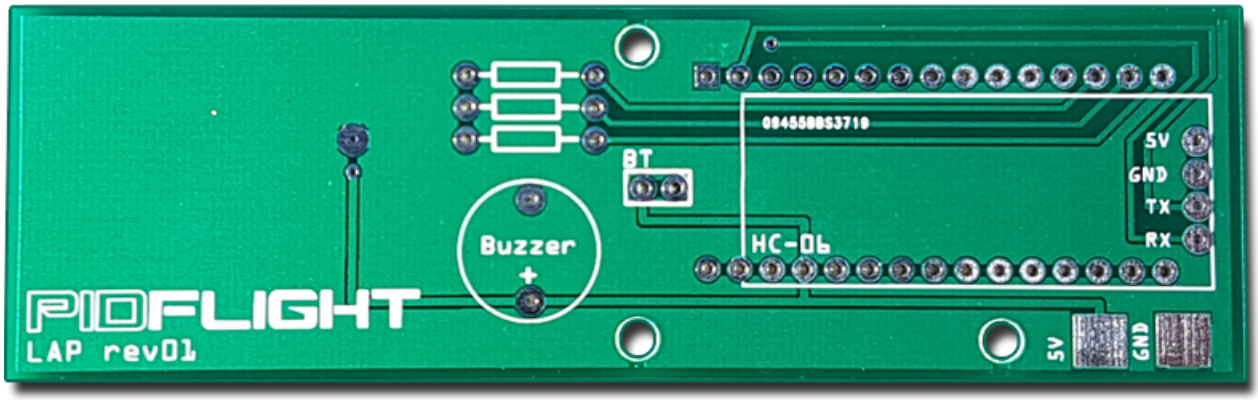

Top view of the PIDflight Lap rev01 PCB.

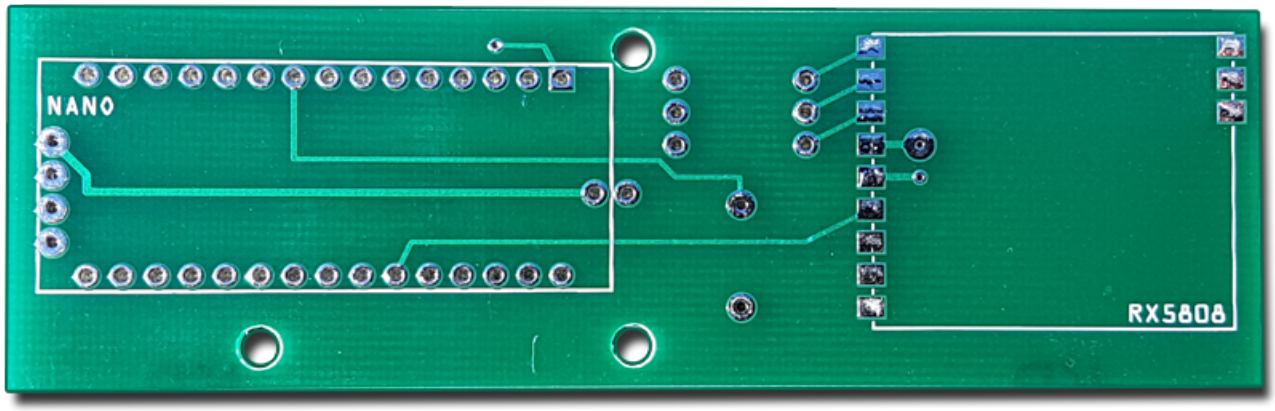

Bottom view of the PIDflight Lap rev01 PCB.

Parts

- 1x PIDflight Lap PCB rev01 board
- 1x RX5808 video receiver module with SPI modification
- 1x Arduino Nano (revision 3)
- 1x HC-06 Bluetooth Serial module
- 3x 1 kΩ resistors
- 1x 5V buzzer
- 1x 4-pin header pins for HC-06
- 1x 2-pin right angle header pins for HC-06
- 1x Jumper pin plug

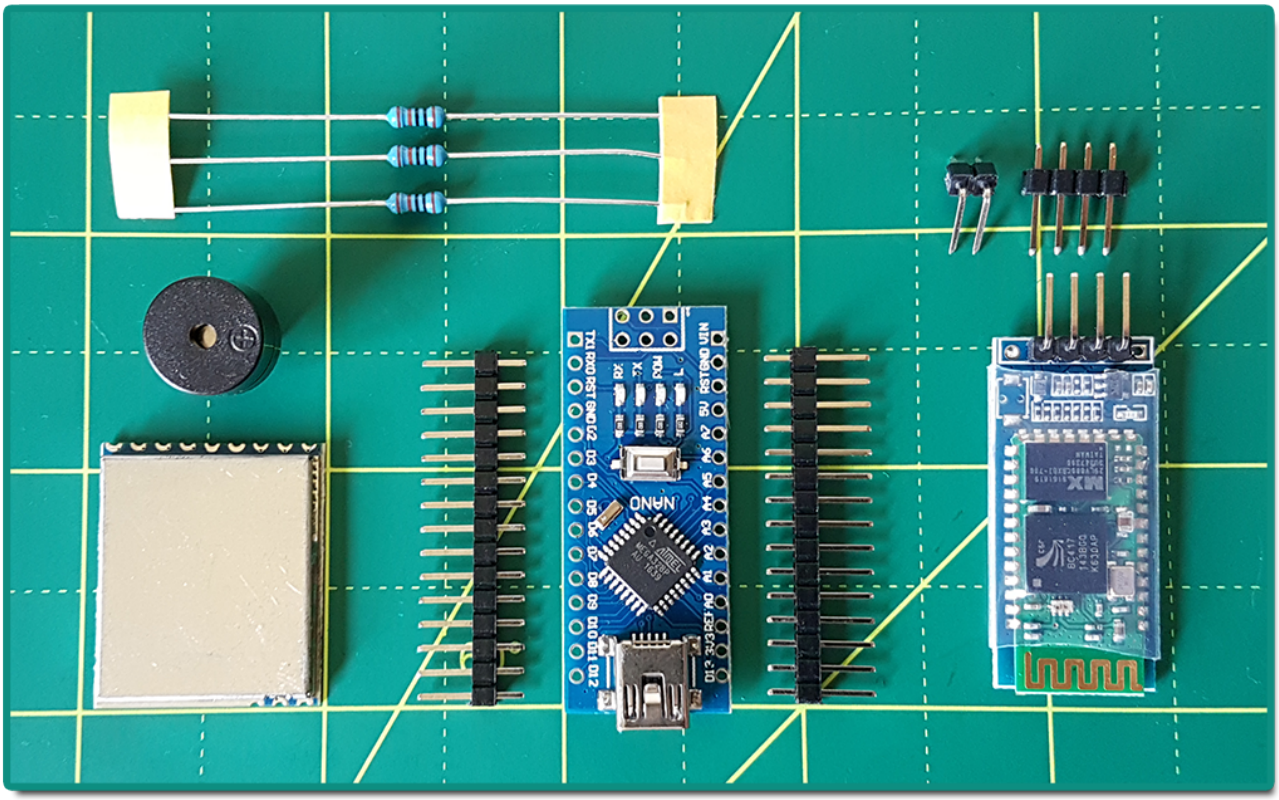

PCB Assembly

1. Place the RX5808 onto the bottom of the PCB, align the PCB pads with the RX5808 tabs and solder.
2. Place the 1K resistors onto the top of the PCB and solder.
3. Place the buzzer onto the top of the PCB and solder.
4. Place the 2-pin right angle header pins (facing away from buzzer, towards 1K resistors) on the top of the PCB and solder.
5. Place the 4-pin header pins, trim down to 0.5mm on opposite side of the PCB, solder from the bottom of the PCB board.
6. Place the Arduino Nano on bottom of PCB (USB at bottom of the PCB board), trim down to 0.5mm on opposite side of the PCB, solder from the top of the PCB board.
7. The common HC-06 Bluetooth module may come with 4 or 6 pins already soldered to the module, de-pin the module and solder directly on the top of the PCB board to the 4-pin header pins (5V, GND, TX and RX)

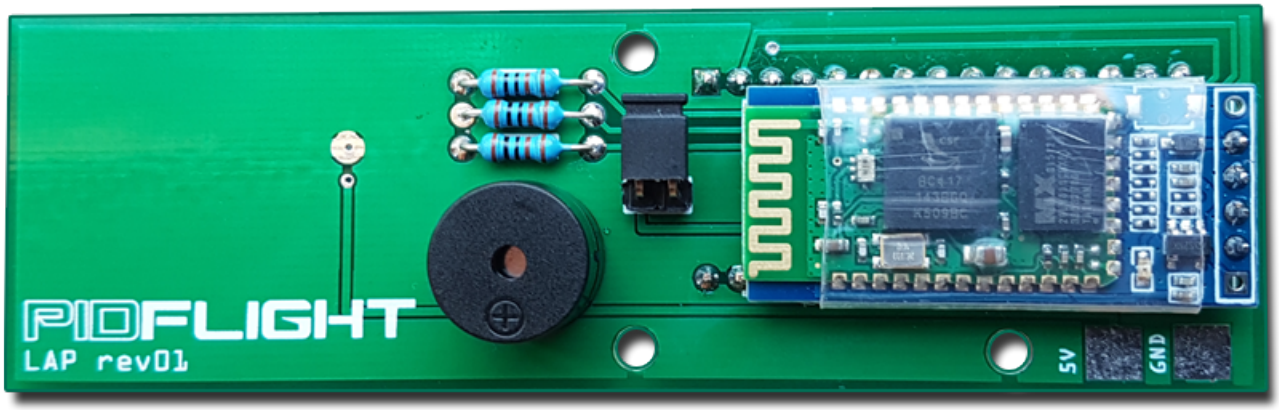

Top view of the PIDflight LAP rev01 PCB assembled.

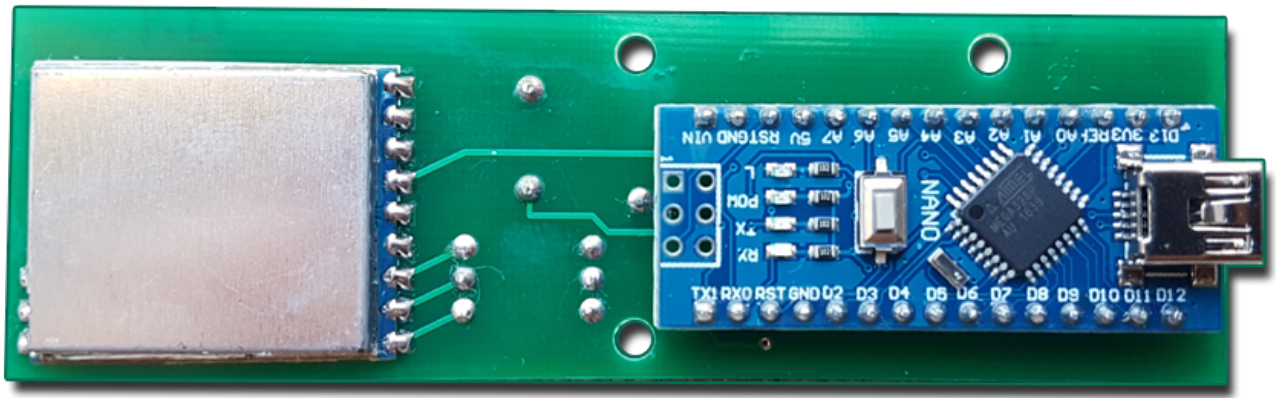

Bottom view of the PIDflight LAP rev01 PCB assembled.

Flashing firmware

1. Temporarily remove the Bluetooth jumper pin located next to the buzzer on the PCB.
2. Perform the steps for flashing the firmware HEX file to the Arduino Nano.
3. Place the Bluetooth jumper pin back onto the PCB.
4. Done!